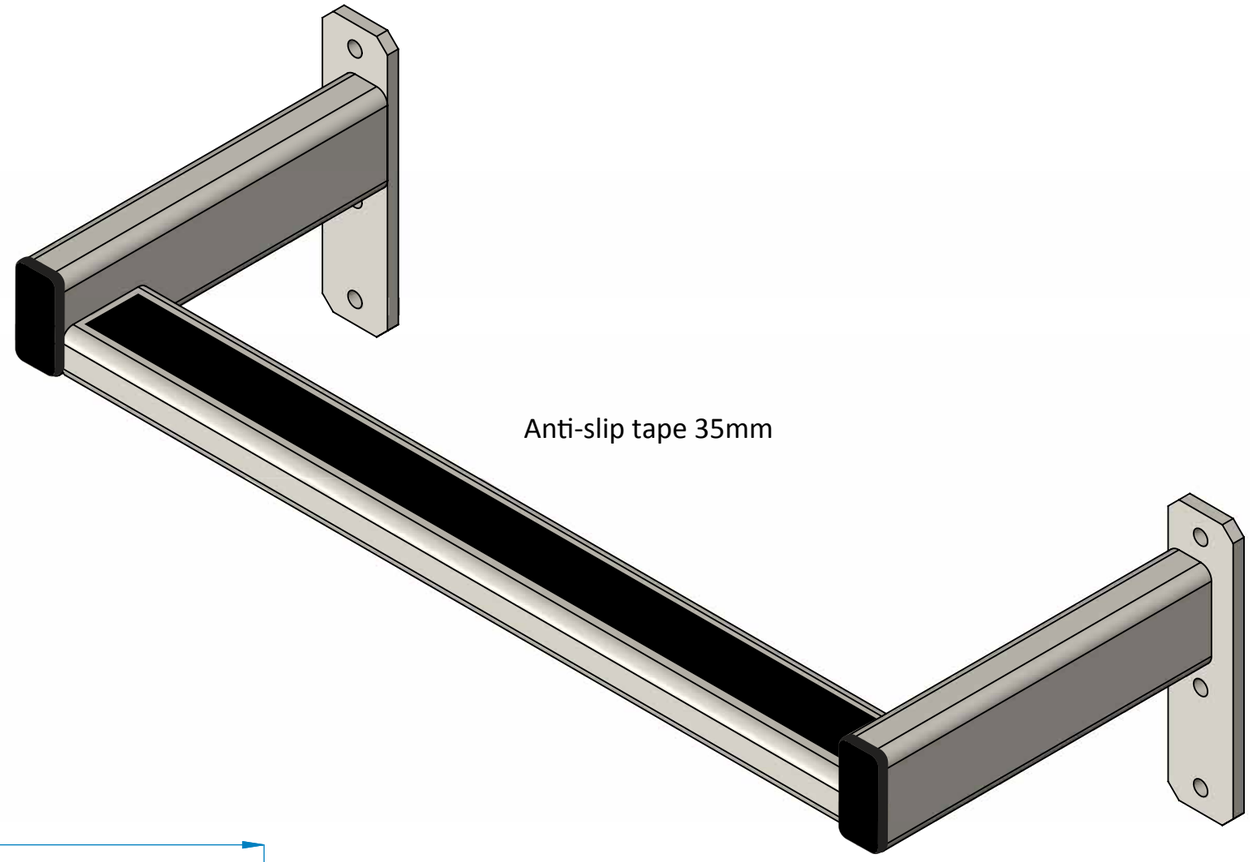

i

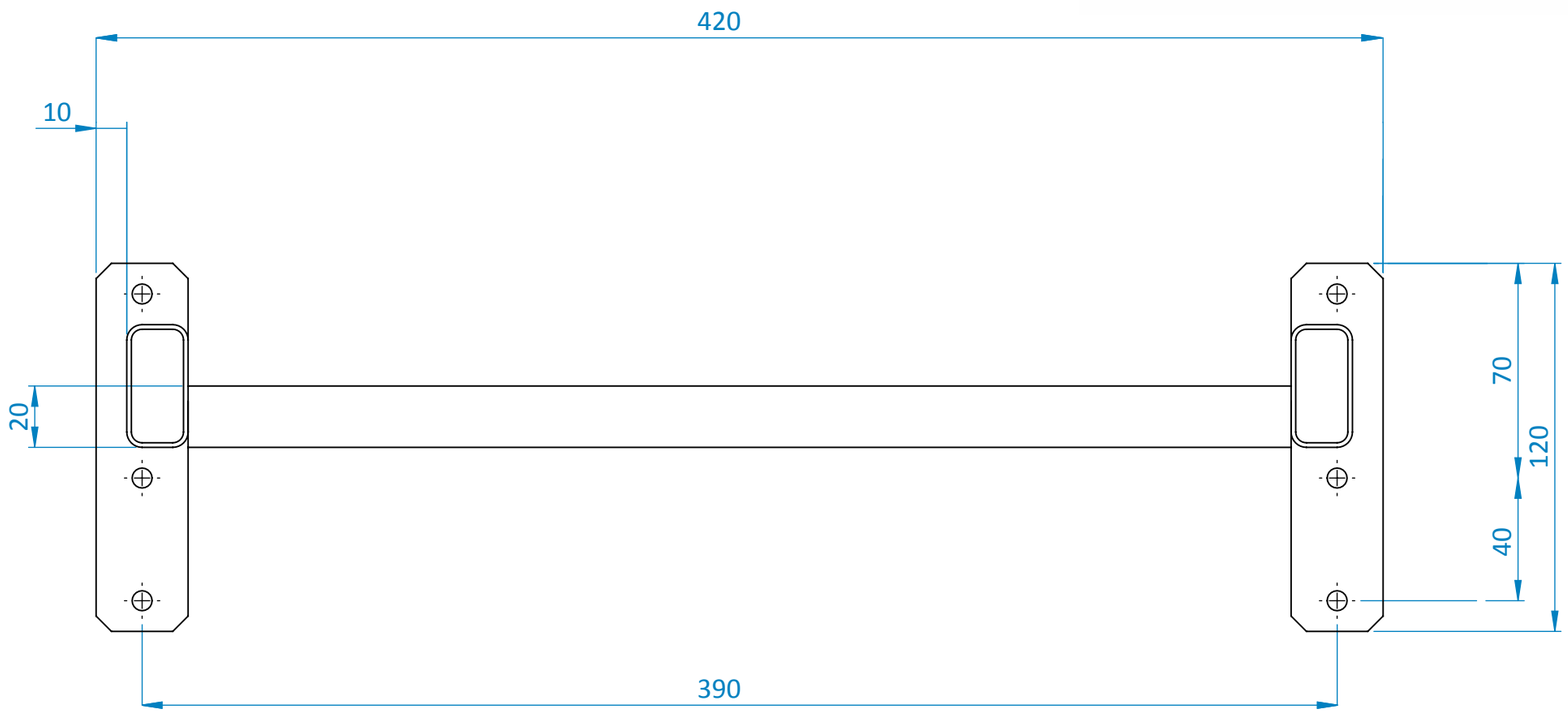

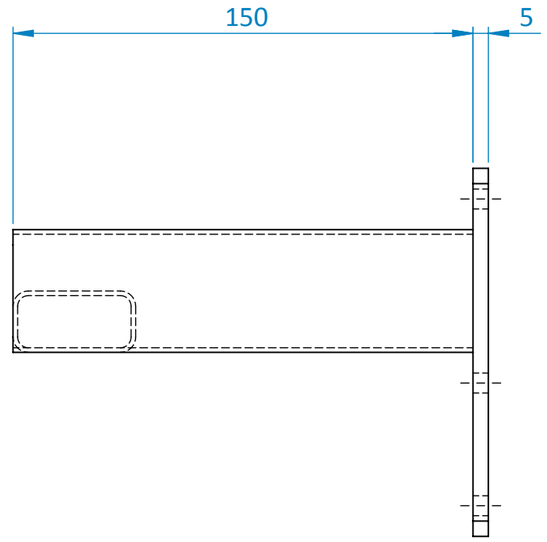

Gorter
Gorter Group B.V.
PO Box 265
1740 AG Schagen
The Netherlands
(+31)(0)224 21 98 60
www.gortergroup.com

General Tolerances unless otherwise specified:
- Manufactured Parts: DIN ISO 2768 - mK
- Welded constructions: DIN ISO 13920 - AE
- Undimensioned edges: DIN ISO 13715 -0,3 +0,5

Forwarding and copying of this document, utilization and communication of its contents are prohibited unless expressly permitted. Violations oblige to compensation. All rights reserved in the event of a patent-, utility-, model- or designregistration.

PROJ. AM.	Drawn: TS	Date: 10-5-2022	Material: S235JR (1.0037)	Part No.:
Dimensions: MM	Chk'd: BvL	Date: 10-4-2022		
Scale 1:2	Weight: 1.10 Kg	Surface Finish: Powdercoated >80 micron / RAL 9010 (pure white)		
Description: Steel Stair step			Drawing No.:	Revision:
			Format: A3	Sheet: 1 of 1