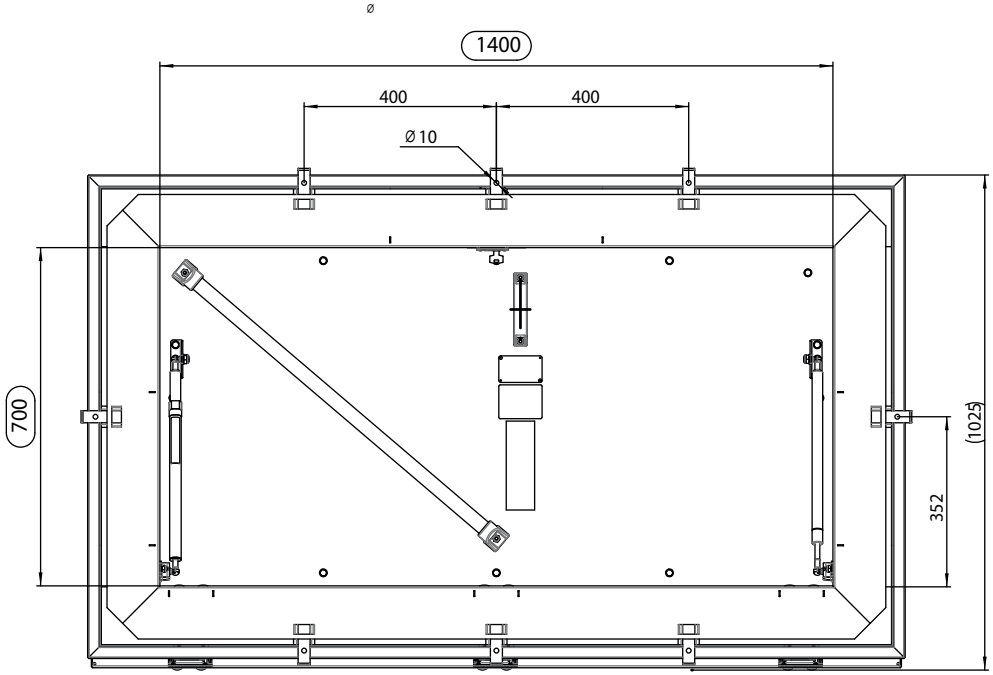

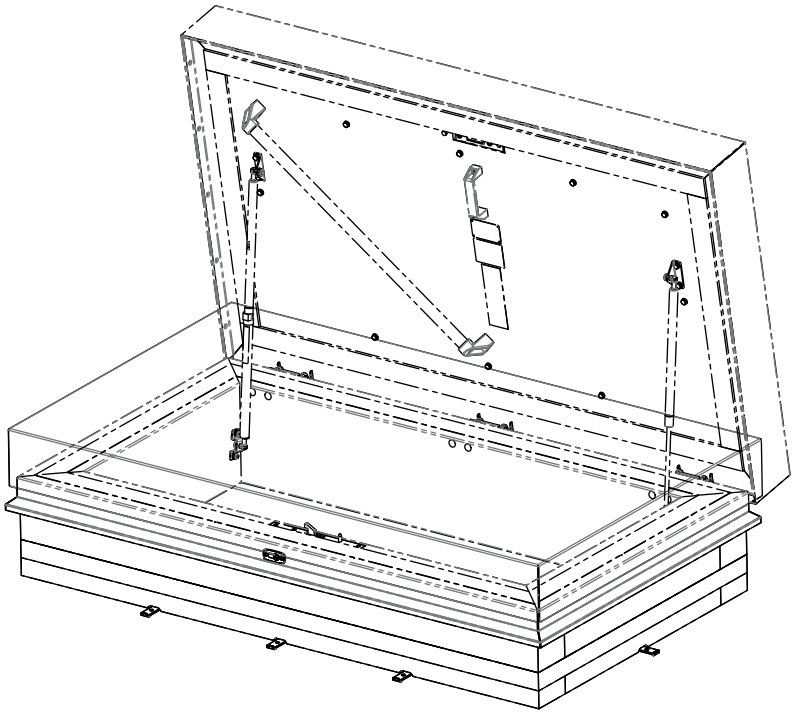

SCALE 1 : 10

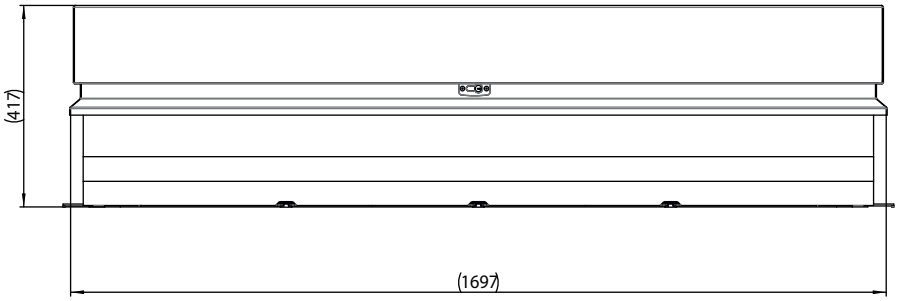

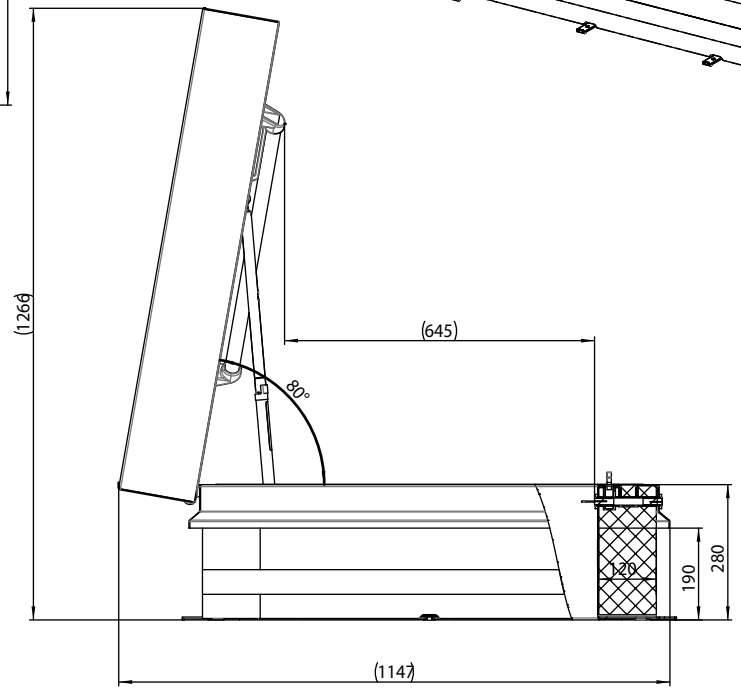

Copyright © 2018 by The Gorter Company BV - Schagen, the Netherlands
All rights reserved. This drawing is the property of publisher and incorporates specifications and designs in which publisher has proprietary rights.
No part may be reproduced, stored in a database or retrieval system or published in any form or any way without prior written permission from the publisher.

The Gorter Company BV
PO Box 265
NL-1740 AG SCHAGEN
www.gortergroup.com
E-mail:sales@gortergroup.com
Tel: +31 224 21 98 60
Fax: +31 224 21 98 61

Designation
Roof Hatch RHTEP

Projection view	Scale	Drawing number	Rev.	
	1:8	RHTEP-0700-1400		1/1 A2